YASKAWA

HTC-500, HTC-1000

Head- and tailstock positioner with horizontal rotation.

One station positioner for workpieces requiring rotation about one axis. Head- and tailstock with MotoMount fixture mounting system mounted on a bed. The distance between headstock and tailstock is fixed.

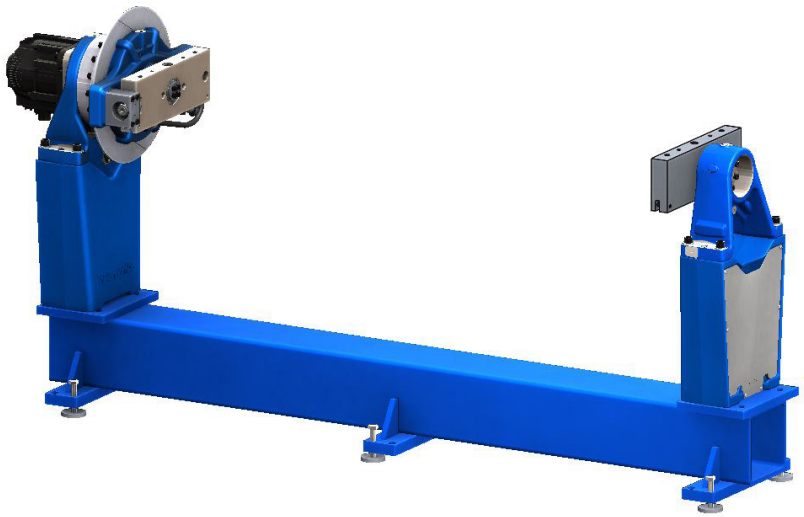

Technical data		HTC-500D		HTC-1000D	
Max. capacity	load	**500 kg**		**1000 kg**	
	offset	150 mm		150 mm	
Motor power		1.3 kW		3.0 kW	
Gear ratio	reducer	165:1		170:1	
Speed	nominal	9.0 rpm		8.8 rpm	
	maximum	23 rpm		23 rpm	
Torque	rated	1177 Nm		2689 Nm	
	continous rated	941 Nm		2151 Nm	
	peak	2354 Nm		5378 Nm	
Rated welding current Standard	100% 60%	350 A 460 A		350 A 460 A	
Rated welding current Option	100% 60% 35%	860 A 1120 A 1380 A		860 A 1120 A 1380 A	
Max fixture width	diameter	1250	1650	1250	1650
Part No.		**141510-xxx**	**141512-xxx**	**141514-xxx**	**141516-xxx**

Fixture holder MotoMount

Controlled by YRC1000

Controlled by DX200

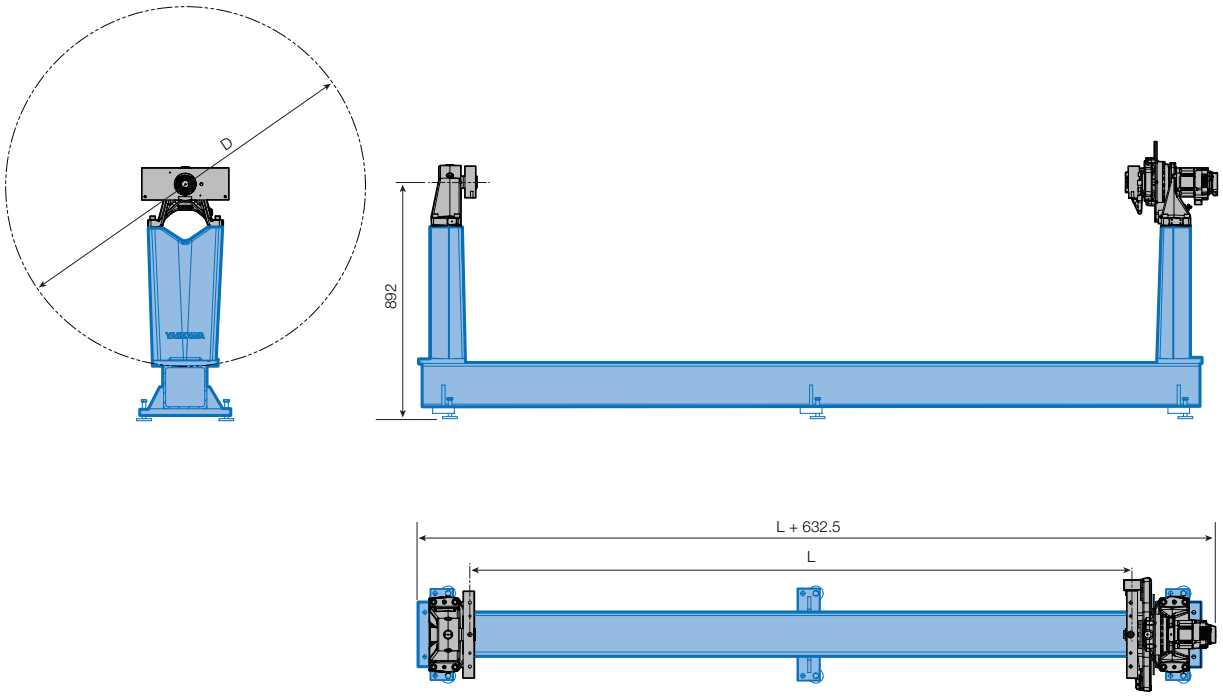

Type	L	D	Part No.
HTC-500D	2050	1250	141510-101
		1650	141512-101
	3050	1250	141510-104
		1650	141512-104
	4050	1250	141510-106
		1650	141512-106
	Other lengths on demand.		
HTC-1000D	2050	1250	141514-101
		1650	141516-101
	3050	1250	141514-104
		1650	141516-104
	4050	1250	141514-106
		1650	141516-106
	Other lengths on demand.		

YASKAWA

© YASKAWA Nordic AB · RegNo. 1072EN-02, Sept 2020
Technical data may be subject to change without previous notice.

YASKAWA Nordic AB
PO Box 504
SE-385 25 Torsås, SWEDEN

Phone +46 480 41 78 00
info.se@yaskawa.eu.com
www.yaskawa.eu.com